Aquno Select
Kitchen Faucet, 2-Spray Pull-Out with sBox, 1.75 GPM
Finishes : **matte black** Part no. : **73830671**

Description

Features

- Swivel range adjustable in 3 steps: 60°, 110° or 150°
- Laminar spray, SatinFlow
- Change between SatinFlow and pull-out sprayer at the touch of a button
- MagFit magnetic sprayhead docking
- Single-hole installation, recommendation: the middle of tap hole drilling should be max. 45 mm from the back side of of the bowl
- Flow: 1.75 GPM (6.6 L/Min)
- Ceramic cartridge
- ⅜" connections
- Integrated double backflow prevention
- sBox for smooth, protected hose guidance in the cabinet; extension length up to 30" (76cm)
- 1 ⅜" Mounting hole required, recommendation: the middle of tap hole drilling should be max. 45 mm from the back side of of the bowl
- CEC/California/Watersaving

Technology

Product image
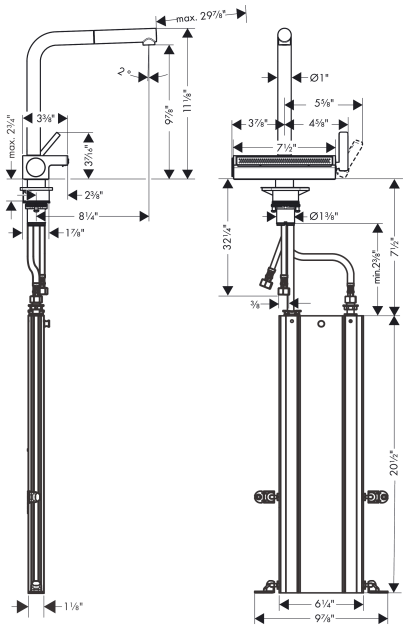
Scale drawing